19-2998; Rev 2; 2/07

EVALUATION KIT AVAILABLE

0.1GHz to 3GHz, 75dB Logarithmic Detector/Controller

MAX2015

General Description

The MAX2015 complete multistage logarithmic amplifier is designed to accurately convert radio-frequency (RF) signal power in the 0.1GHz to 3GHz frequency range to an equivalent DC voltage. The outstanding dynamic range and precision over temperature of this log amplifier make it particularly useful for a variety of base station and other wireless applications, including automatic gain control (AGC), transmitter power measurements, and received signal strength indication (RSSI) for terminal devices.

The MAX2015 can also be operated in a controller mode where it measures, compares, and controls the output power of a variable-gain amplifier as part of a fully integrated AGC loop.

This logarithmic amplifier provides much wider measurement range and superior accuracy compared to controllers based on diode detectors, while achieving excellent temperature stability over the full -40°C to +85°C operating range.

Applications

AGC Measurement and Control

RF Transmitter Power Measurement

RSSI Measurements

Cellular Base Station, WLAN, Microwave Link, Radar, and other Military Applications

Features

- **Complete RF Detector/Controller**
- **0.1GHz to 3GHz Frequency Range**
- **Exceptional Accuracy Over Temperature**
- **High Dynamic Range**
- **2.7V to 5.25V Supply Voltage Range***
- **Scaling Stable Over Supply and Temperature Variations**
- **Controller Mode with Error Output**
- **Shutdown Mode with Typically 1µA of Supply Current**
- **Available in 8-Pin µMAX® and TDFN Packages**

**See Power-Supply Connections section.*
µMAX is a registered trademark of Maxim Integrated Products, Inc.

Ordering Information

PART	TEMP RANGE	PIN-PACKAGE	PKG CODE
MAX2015EUA	-40°C to +85°C	8 µMAX	U8-1
MAX2015EUA-T	-40°C to +85°C	8 µMAX	U8-1

T = Tape-and-reel.
+Denotes lead-free and RoHS compliance.
**EP = Exposed paddle.*
Ordering Information continued at end of data sheet.

Functional Diagram

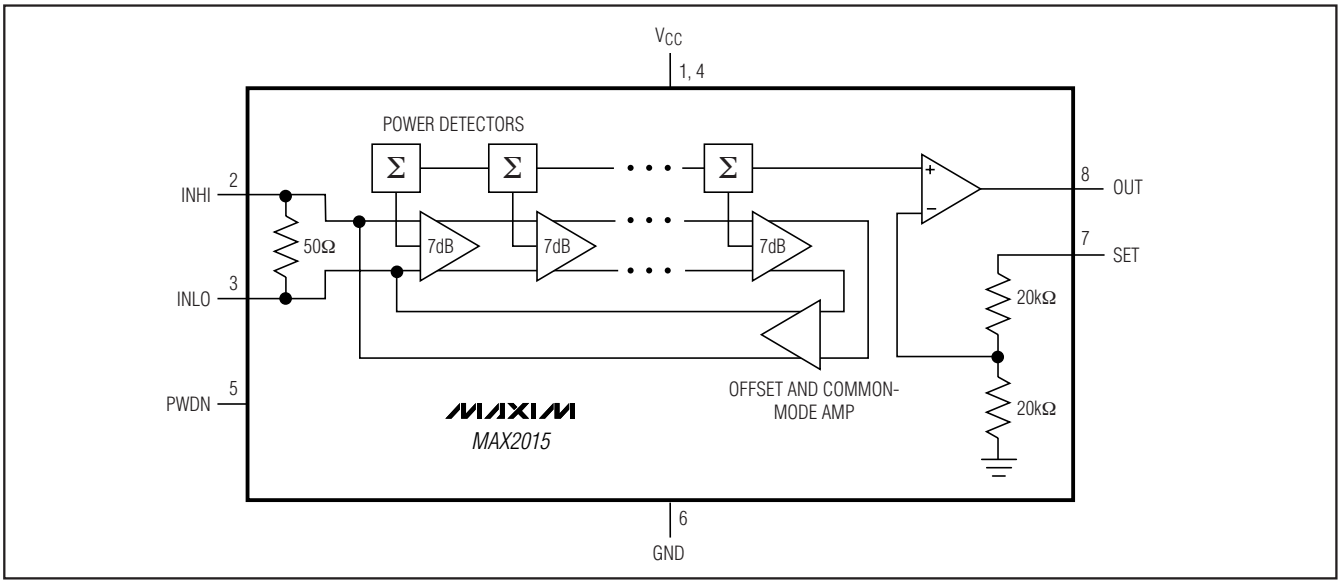

Pin Configuration appears at end of data sheet.

For pricing, delivery, and ordering information, please contact Maxim/Dallas Direct! at 1-888-629-4642, or visit Maxim's website at www.maxim-ic.com.

0.1GHz to 3GHz, 75dB Logarithmic Detector/Controller

ABSOLUTE MAXIMUM RATINGS

V_{CC} (Pins, 1, 4) to GND.....-0.3V to +5.25V
SET, PWDN to GND.....-0.3V to (V_{CC} + 0.3V)
Input Power Differential INHI, INLO.....+23dBm
Input Power Single Ended (INHI or INLO grounded).....+19dBm
Continuous Power Dissipation (T_A = +70°C)
8-Pin µMAX (derate 4.5mW/°C above +70°C).....362mW
8-Pin TDFN (derate 18.5mW/°C above +70°C).....1480mW
Operating Temperature Range.....-40°C to +85°C
Junction Temperature.....+150°C
Storage Temperature Range.....-65°C to +150°C
Lead Temperature (soldering, 10s).....+300°C

Stresses beyond those listed under "Absolute Maximum Ratings" may cause permanent damage to the device. These are stress ratings only, and functional operation of the device at these or any other conditions beyond those indicated in the operational sections of the specifications is not implied. Exposure to absolute maximum rating conditions for extended periods may affect device reliability.

DC ELECTRICAL CHARACTERISTICS

(MAX2015 typical application circuit (Figure 1), V_S = +3.3V, f_{RF} = 100MHz to 3000MHz, R1 = 0Ω, R4 = 0Ω, R_L = 10kΩ, T_A = -40°C to +85°C, unless otherwise noted. Typical values are at T_A = +25°C, unless otherwise noted.) (Note 1)

PARAMETER	SYMBOL	CONDITIONS	MIN	TYP	MAX	UNITS
POWER SUPPLY						
Supply Voltage	V_S	R4 = 75Ω ±1%, PWDN must be connected to GND	4.75		5.25	V
		R4 = 0Ω	2.7		3.6	
Supply Current	I_{CC}	T_A = +25°C, V_S = 5.25V, R4 = 75Ω		17.3		mA
		T_A = +25°C		17.3	20.5	
Supply Current Variation with Temp	I_{CC}	T_A = -40°C to +85°C		0.05		mA/°C
Shutdown Current	I_{CC}	V_{PWDN} = V_{CC}		1		µA
CONTROLLER REFERENCE (SET)						
SET Input Voltage Range				0.5 to 1.8		V
SET Input Impedance				40		kΩ
DETECTOR OUTPUT (OUT)						
Source Current				4		mA
Sink Current				450		µA
Minimum Output Voltage	$V_{OUT(MIN)}$			0.5		V
Maximum Output Voltage	$V_{OUT(MAX)}$			1.8		V

AC ELECTRICAL CHARACTERISTICS

(MAX2015 typical application circuit (Figure 1), V_S = +3.3V, f_{RF} = 100MHz to 3000MHz, R1 = 0Ω, R4 = 0Ω, R_L = 10kΩ, T_A = -40°C to +85°C, unless otherwise noted. Typical values are at T_A = +25°C, unless otherwise noted.) (Note 1)

PARAMETER	SYMBOL	CONDITIONS	MIN	TYP	MAX	UNITS
RF Input Frequency Range	f_{RF}			0.1 to 3		GHz
Return Loss	S_{11}			-15		dB
Large-Signal Response Time		P_{IN} = no signal to 0dBm, ±0.5dB settling accuracy		150		ns
RSSI MODE—0.1GHz						
RF Input Power Range		(Note 2)		-65 to +5		dBm
±3dB Dynamic Range		T_A = -40°C to +85°C (Note 3)		70		dB
Range Center				-30		dBm
Temp Sensitivity when T_A > +25°C		T_A = +25°C to +85°C, P_{IN} = -25dBm		+0.0083		dB/°C
Temp Sensitivity when T_A < +25°C		T_A = -40°C to +25°C, P_{IN} = -25dBm		-0.0154		dB/°C
Slope		(Note 4)		19		mV/dB
Typical Slope Variation		T_A = -40°C to +85°C		-4		µV/°C
Intercept		(Note 5)		-100		dBm
Typical Intercept Variation		T_A = -40°C to +85°C		0.03		dBm/°C
RSSI MODE—0.9GHz						
RF Input Power Range		(Note 2)		-65 to +5		dBm
±3dB Dynamic Range		T_A = -40°C to +85°C (Note 3)		70		dB
Range Center				-30		dBm
Temp Sensitivity when T_A > +25°C		T_A = +25°C to +85°C, P_{IN} = -25dBm		±0.0083		dB/°C
Temp Sensitivity when T_A < +25°C		T_A = -40°C to +25°C, P_{IN} = -25dBm		-0.0154		dB/°C
Slope		(Note 4)		18.1		mV/dB
Typical Slope Variation		T_A = -40°C to +85°C		-4		µV/°C
Intercept		(Note 5)		-97		dBm
Typical Intercept Variation		T_A = -40°C to +85°C		0.02		dBm/°C
RSSI MODE—1.9GHz						
RF Input Power Range		(Note 2)		-55 to +5		dBm
±3dB Dynamic Range		T_A = -40°C to +85°C (Note 3)		60		dB
Range Center				-25		dBm
Temp Sensitivity when T_A > +25°C		T_A = +25°C to +85°C, P_{IN} = -25dBm		±0.0033		dB/°C
Temp Sensitivity when T_A < +25°C		T_A = -40°C to +25°C, P_{IN} = -25dBm		-0.0138		dB/°C
Slope		(Note 4)		18		mV/dB
Typical Slope Variation		T_A = -40°C to +85°C		-4.8		µV/°C

0.1GHz to 3GHz, 75dB Logarithmic Detector/Controller

AC ELECTRICAL CHARACTERISTICS (continued)

(MAX2015 typical application circuit (Figure 1), V_S = +3.3V, f_{RF} = 100MHz to 3000MHz, R1 = 0Ω, R4 = 0Ω, R_L = 10kΩ, T_A = -40°C to +85°C, unless otherwise noted. Typical values are at T_A = +25°C, unless otherwise noted.) (Note 1)

PARAMETER	SYMBOL	CONDITIONS	MIN	TYP	MAX	UNITS
Intercept		(Note 5)		-83		dBm
Typical Intercept Variation		T_A = -40°C to +85°C		0.03		dBm/°C
RSSI MODE—2.5GHz						
RF Input Power Range		(Note 2)		-45 to -5		dBm
±3dB Dynamic Range		T_A = -40°C to +85°C (Note 3)		40		dB
Range Center				-25		dBm
Temp Sensitivity when T_A > +25°C		T_A = +25°C to +85°C, P_{IN} = -25dBm		-0.0083		dB/°C
Temp Sensitivity when T_A < +25°C		T_A = -40°C to +25°C, P_{IN} = -25dBm		-0.0083		dB/°C
Slope		(Note 4)		16.8		mV/dB
Typical Slope Variation		T_A = -40°C to +85°C		-8		µV/°C
Intercept		(Note 5)		-81		dBm
Typical Intercept Variation		T_A = -40°C to +85°C		0.03		dBm/°C

Note 1: The MAX2015 is guaranteed by design for T_A = -40°C to +85°C, as specified.

Note 2: Typical minimum and maximum range of the detector at the stated frequency.

Note 3: Dynamic range refers to the range over which the error remains within the stated bounds. The error is calculated at -40°C and +85°C, relative to the curve at +25°C.

Note 4: The slope is the variation of the output voltage per change in input power. It is calculated by fitting a root-mean-square (RMS) straight line to the data indicated by RF input power range.

Note 5: The intercept is an extrapolated value that corresponds to the output power for which the output voltage is zero. It is calculated by fitting an RMS straight line to the data.

Typical Operating Characteristics

(MAX2015 typical application circuit (Figure 1), $V_S = V_{CC} = 3.3V$, $P_{IN} = -10dBm$, $f_{IN} = 100MHz$, R1 = 0Ω, R4 = 0Ω, $R_L = 10k\Omega$, $V_{PWDN} = 0V$, $T_A = +25°C$, unless otherwise noted.)

OUTPUT VOLTAGE vs. INPUT POWER

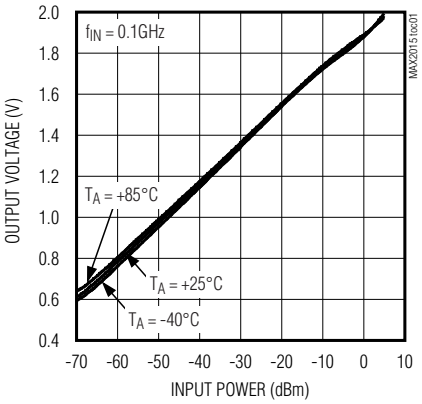

OUTPUT-VOLTAGE ERROR vs. INPUT POWER

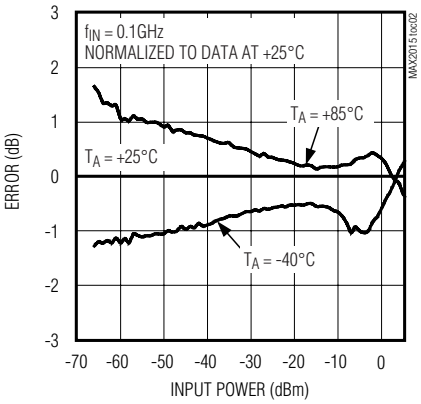

OUTPUT-VOLTAGE ERROR vs. INPUT POWER

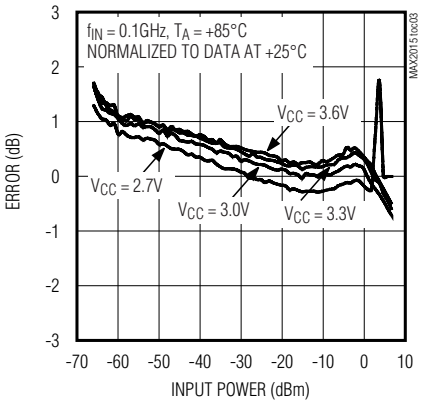

OUTPUT-VOLTAGE ERROR vs. INPUT POWER

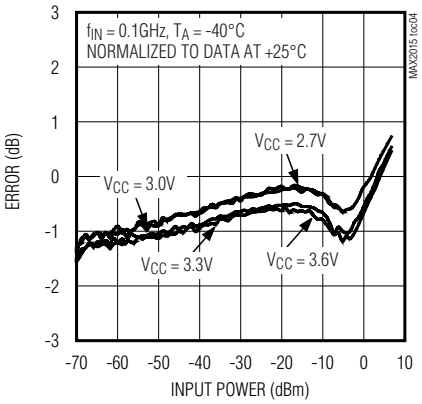

OUTPUT VOLTAGE vs. INPUT POWER

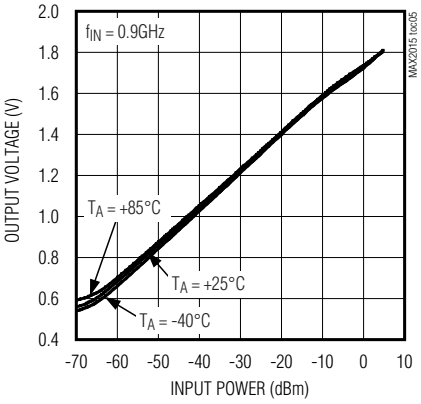

OUTPUT-VOLTAGE ERROR vs. INPUT POWER

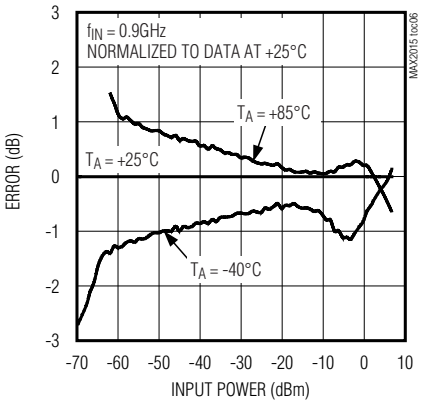

OUTPUT-VOLTAGE ERROR vs. INPUT POWER

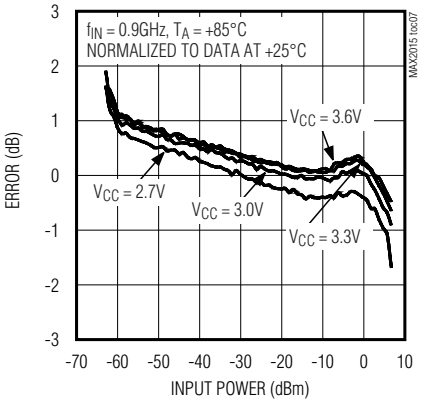

OUTPUT-VOLTAGE ERROR vs. INPUT POWER

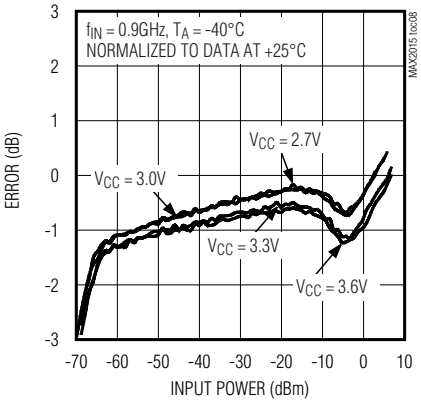

OUTPUT VOLTAGE vs. INPUT POWER

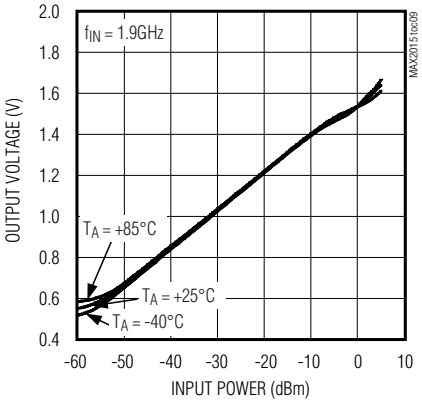

0.1GHz to 3GHz, 75dB Logarithmic Detector/Controller

Typical Operating Characteristics (continued)

(MAX2015 typical application circuit (Figure 1), $V_S = V_{CC} = 3.3V$, $P_{IN} = -10dBm$, $f_{IN} = 100MHz$, R1 = 0Ω, R4 = 0Ω, $R_L = 10k\Omega$, V_{PWDN} = 0V, $T_A = +25°C$, unless otherwise noted.)

OUTPUT-VOLTAGE ERROR vs. INPUT POWER

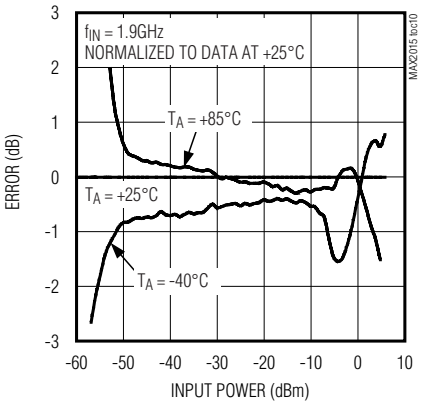

OUTPUT-VOLTAGE ERROR vs. INPUT POWER

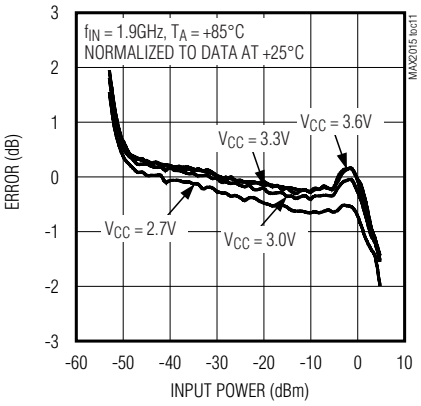

OUTPUT-VOLTAGE ERROR vs. INPUT POWER

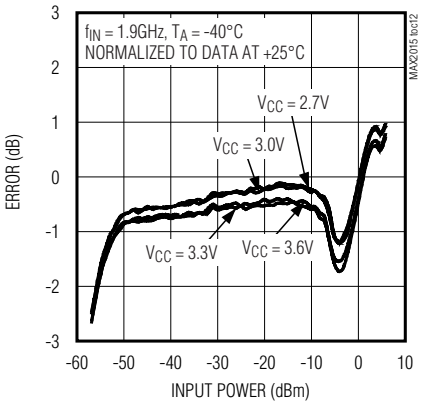

OUTPUT VOLTAGE vs. INPUT POWER

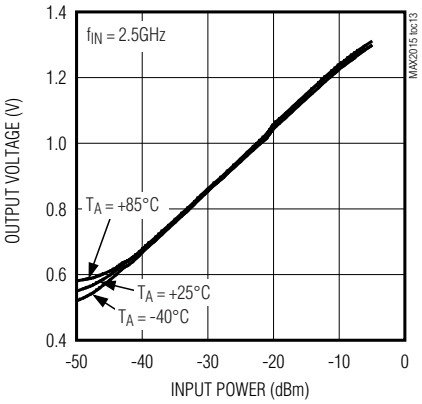

OUTPUT-VOLTAGE ERROR vs. INPUT POWER

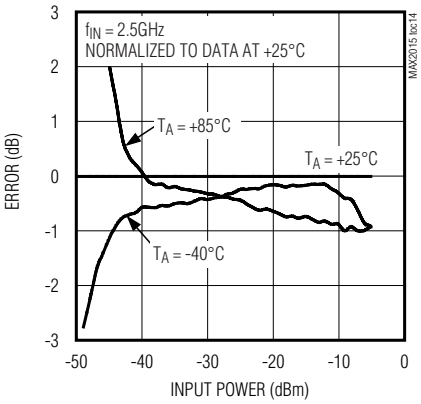

OUTPUT-VOLTAGE ERROR vs. INPUT POWER

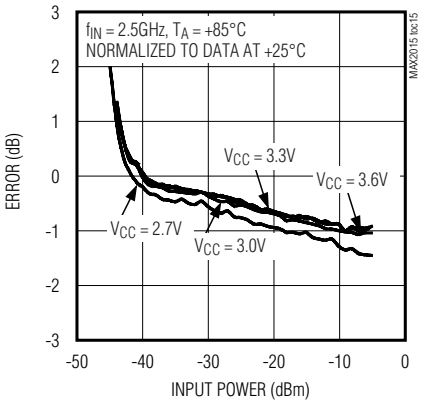

OUTPUT-VOLTAGE ERROR vs. INPUT POWER

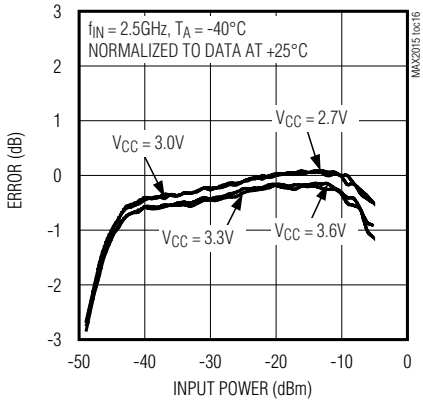

OUTPUT VOLTAGE vs. INPUT POWER

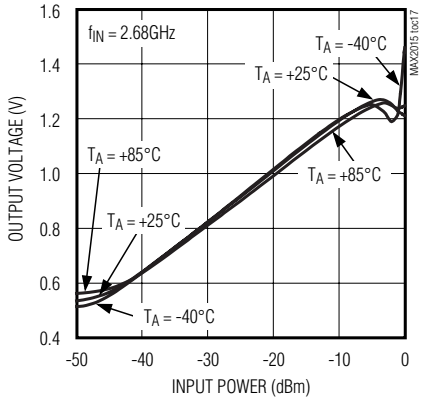

OUTPUT-VOLTAGE ERROR vs. INPUT POWER

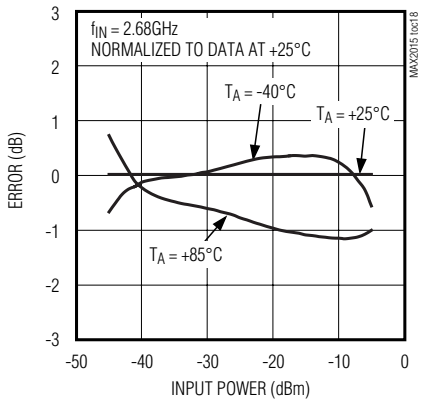

Typical Operating Characteristics (continued)

(MAX2015 typical application circuit (Figure 1), $V_S = V_{CC} = 3.3V$, $P_{IN} = -10dBm$, $f_{IN} = 100MHz$, R1 = 0Ω, R4 = 0Ω, $R_L = 10k\Omega$, $V_{PWDN} = 0V$, $T_A = +25°C$, unless otherwise noted.)

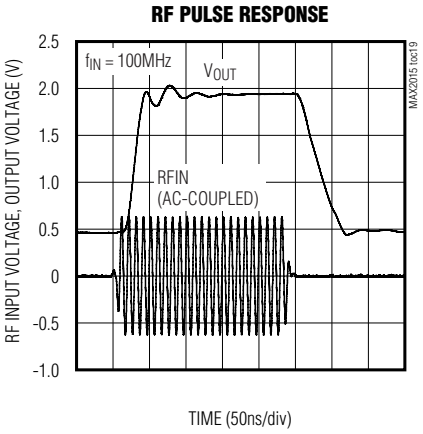

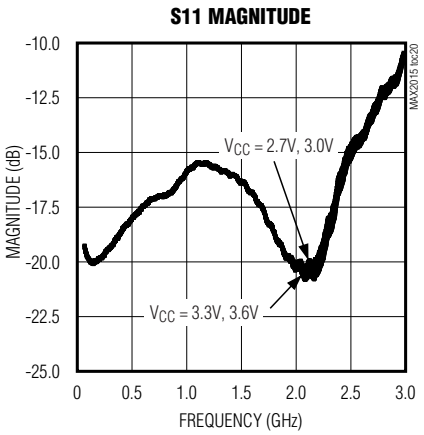

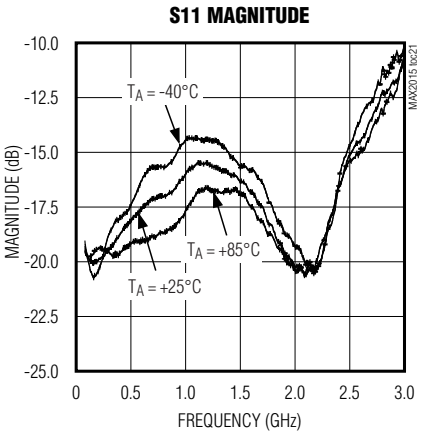

Pin Description

PIN	NAME	FUNCTION
1, 4	V_{CC}	Supply Voltage. Bypass with capacitors as specified in the application drawing. Place capacitors as close to the pin as possible (see the *Power-Supply Connections* section).
2, 3	INHI, INLO	Differential RF Inputs
5	PWDN	Power-Down Input. Drive PWDN with a logic-high to power down the IC. PWDN must be connected to GND for V_S between 4.75V and 5.25V with R4 = 75Ω.
6	GND	Ground. Connect to the PCB ground plane.
7	SET	Set-Point Input. To operate in detector mode, connect SET to OUT. To operate in controller mode, connect a precision voltage source to control the power level of a power amplifier.
8	OUT	Detector Output. In detector mode, this output provides a voltage proportional to the log of the input power. In controller mode, this output is connected to a power-control input on a power amplifier (PA).
—	EP	Exposed Paddle (TDFN package only). Connect EP to GND using multiple vias, or the EP can also be left unconnected.

0.1GHz to 3GHz, 75dB Logarithmic Detector/Controller

Detailed Description

The MAX2015 is a successive detection logarithmic amplifier designed for use in RF power measurement and AGC applications with a 0.1GHz to 3GHz frequency range from a single 2.7V to 3.6V power supply. It is pin compatible with other leading logarithmic amplifiers.

The MAX2015 provides for improved performance with a high 75dB dynamic range at 100MHz, and exceptional accuracy over the extended temperature range and supply voltage range.

RF Input

The MAX2015 differential RF input (INHI, INLO) allows for broadband signals between 100MHz and 3GHz. For single-ended signals, AC-couple INLO to ground. The RF inputs are internally biased and need to be AC-coupled using 680pF capacitors as shown in Figure 1 and Figure 2. An internal 50Ω resistor between INHI and INLO provides a good 50MHz to 3.0GHz match.

SET Input

The SET input is used for loop control when in controller mode or to set the slope of the output signal (mV/dB) when in detector mode. The internal input structure of SET is two series 20kΩ resistors connected to ground. The center node of the resistors is fed to the negative input of the internal output op amp.

Power-Supply Connections

The MAX2015 requires power-supply bypass capacitors connected close to each V_{CC} pin. At each V_{CC} pin, connect a 0.1µF capacitor (C4, C6) and a 100pF capacitor (C3, C5) with the 100pF capacitor being closest to the pin.

For power-supply voltages (V_S) between 2.7V and 3.6V, set R4 = 0Ω (see the typical applications circuits).

For power-supply voltages (V_S) between 4.75V and 5.25V, set R4 = 75Ω ±1% (100ppm/°C max) and PWDN must be connected to GND.

Power-Down Mode

The MAX2015 can be powered down by driving PWDN with logic high (logic high = V_{CC}). In power-down mode, the supply current is reduced to a typical value of 1µA. For normal operation, drive PWDN with a logic low. It is recommended when using power-down that an RF signal not be applied before the power-down signal is low.

Applications Information

Detector (RSSI) Mode

In detector mode, the MAX2015 acts like an RSSI, which provides an output voltage proportional to the input power. This is accomplished by providing a feedback path from OUT to SET (R1 = 0Ω; see Figure 1).

By connecting SET directly to OUT, the op amp gain is set to 2V/V due to two internal 20kΩ feedback resistors. This provides a detector slope of approximately 18mV/dB with a 0.5V to 1.8V output range.

Controller Mode

The MAX2015 can also be used as a detector/controller within an AGC loop. Figure 3 depicts one scenario where the MAX2015 is employed as the controller for a variable-gain PA. As shown in the figure, the MAX2015 monitors the output of the PA through a directional coupler. An internal integrator (Figure 2) compares the

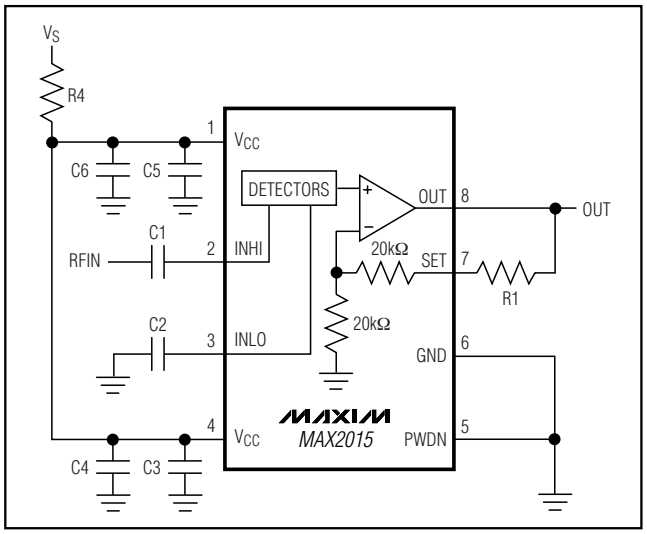

Figure 1. Detector-Mode (RSSI) Typical Application Circuit

Table 1. Suggested Components of Typical Applications Circuits

DESIGNATION	VALUE	TYPE
C1, C2	680pF	0603 ceramic capacitors
C3, C5	100pF	0603 ceramic capacitors
C4, C6	0.1µF	0603 ceramic capacitors
R1*	0Ω	0603 resistor
R4**	0Ω	0603 resistor

**RSSI mode only.*
***V_S = 2.7V to 3.6V.*

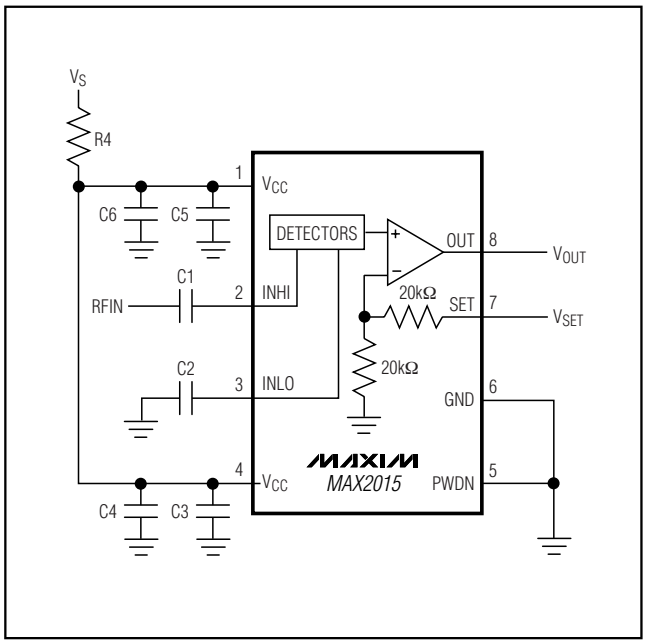

Figure 2. Controller-Mode Typical Application Circuit

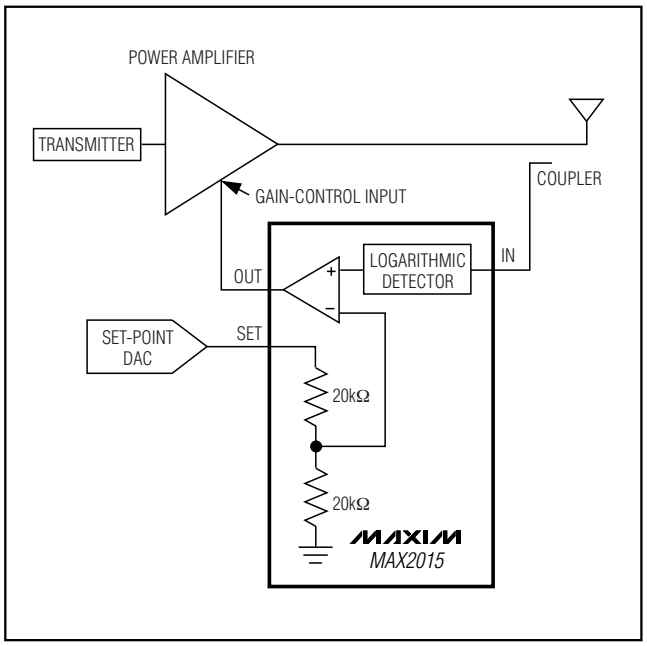

Figure 3. System Diagram for Automatic Gain-Control Loop

detected signal with a reference voltage determined by V_{SET}. The integrator, acting like a comparator, increases or decreases the voltage at OUT, according to how closely the detected signal level matches the V_{SET} reference. The MAX2015 adjusts the power of the PA to a level determined by the voltage applied to SET. With R1 = 0Ω, the controller mode slope is approximately 19mV/dB (RF = 100MHz).

Layout Considerations

As with any RF circuit, the layout of the MAX2015 circuit affects the device's performance. Use an abundant number of ground vias to minimize RF coupling. Place the input capacitors (C1, C2) and the bypass capacitors (C3–C6) as close to the IC as possible. Connect the bypass capacitors to the ground plane with multiple vias.

0.1GHz to 3GHz, 75dB Logarithmic Detector/Controller

Ordering Information (continued)

PART	TEMP RANGE	PIN-PACKAGE	PKG CODE
MAX2015EUA+	-40°C to +85°C	8 µMAX	U8-1
MAX2015EUA+T	-40°C to +85°C	8 µMAX	U8-1
MAX2015ETA	-40°C to +85°C	8 TDFN-EP* (3mm x 3mm)	T833-2
MAX2015ETA-T	-40°C to +85°C	8 TDFN-EP* (3mm x 3mm)	T833-2
MAX2015ETA+	-40°C to +85°C	8 TDFN-EP* (3mm x 3mm)	T833-2
MAX2015ETA+T	-40°C to +85°C	8 TDFN-EP* (3mm x 3mm)	T833-2

T = Tape-and-reel.
+Denotes lead-free and RoHS compliance.
**EP = Exposed paddle.*

Pin Configuration

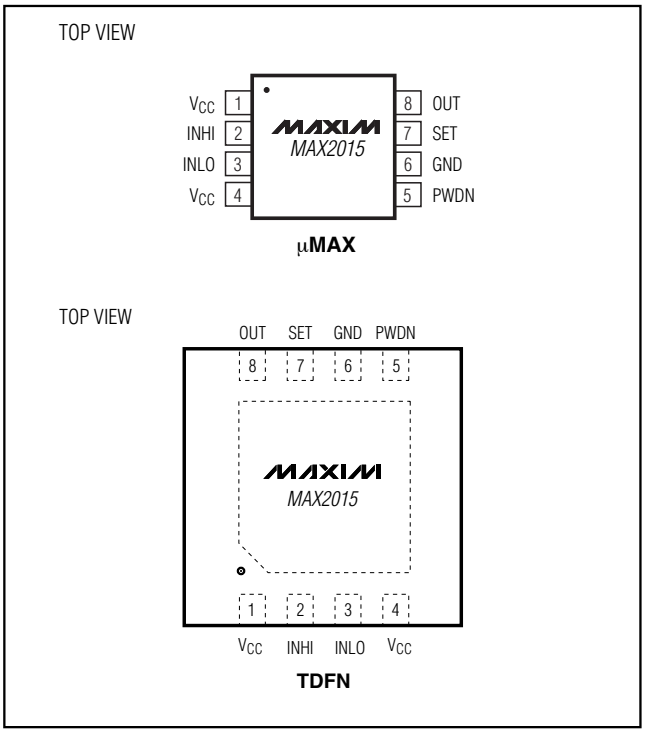

Chip Information

TRANSISTOR COUNT: 3157

PROCESS: BiCMOS

Package Information

(The package drawing(s) in this data sheet may not reflect the most current specifications. For the latest package outline information, go to **www.maxim-ic.com/packages**.)

8LUMAXD.EPS

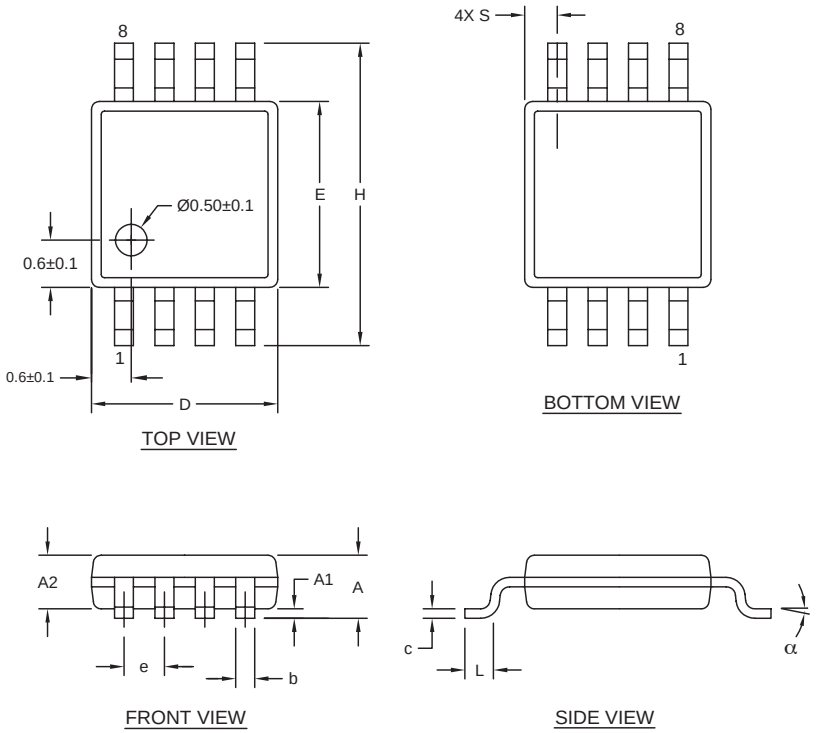

	INCHES		MILLIMETERS	
DIM	MIN	MAX	MIN	MAX
A	-	0.043	-	1.10
A1	0.002	0.006	0.05	0.15
A2	0.030	0.037	0.75	0.95
b	0.010	0.014	0.25	0.36
c	0.005	0.007	0.13	0.18
D	0.116	0.120	2.95	3.05
e	0.0256 BSC		0.65 BSC	
E	0.116	0.120	2.95	3.05
H	0.188	0.198	4.78	5.03
L	0.016	0.026	0.41	0.66
α	0°	6°	0°	6°
S	0.0207 BSC		0.5250 BSC	

NOTES:
1. D&E DO NOT INCLUDE MOLD FLASH.
2. MOLD FLASH OR PROTRUSIONS NOT TO EXCEED 0.15MM (.006").
3. CONTROLLING DIMENSION: MILLIMETERS.
4. MEETS JEDEC MO-187C-AA.

DALLAS SEMICONDUCTOR MAXIM

PROPRIETARY INFORMATION

TITLE: PACKAGE OUTLINE, 8L uMAX/uSOP

APPROVAL	DOCUMENT CONTROL NO.	REV.	
	21-0036	J	1/1

0.1GHz to 3GHz, 75dB Logarithmic Detector/Controller

Package Information (continued)

(The package drawing(s) in this data sheet may not reflect the most current specifications. For the latest package outline information, go to **www.maxim-ic.com/packages**.)

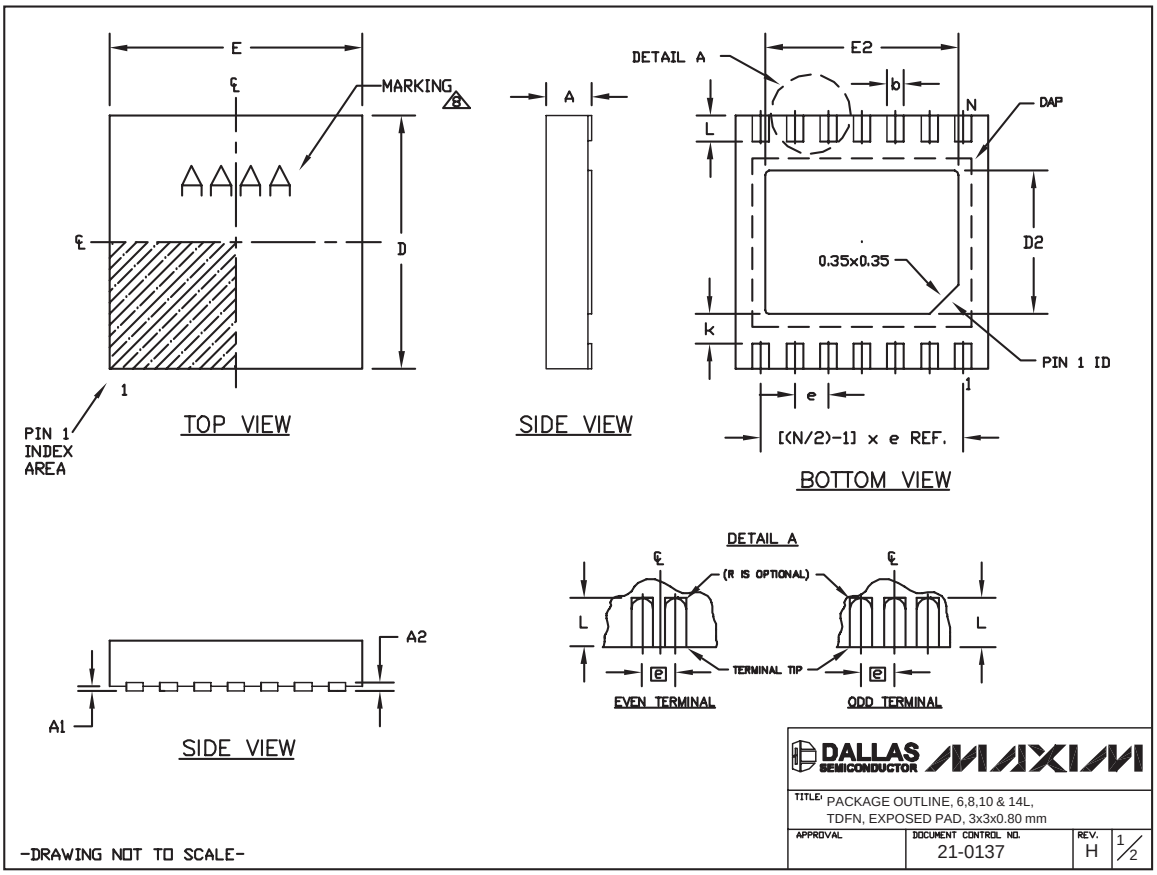

Package Information (continued)

(The package drawing(s) in this data sheet may not reflect the most current specifications. For the latest package outline information, go to **www.maxim-ic.com/packages**.)

COMMON DIMENSIONS		
SYMBOL	MIN.	MAX.
A	0.70	0.80
D	2.90	3.10
E	2.90	3.10
A1	0.00	0.05
L	0.20	0.40
k	0.25 MIN.	
A2	0.20 REF.	

PACKAGE VARIATIONS							
PKG. CODE	N	D2	E2	e	JEDEC SPEC	b	[(N/2)-1] x e
T633-1	6	1.50±0.10	2.30±0.10	0.95 BSC	MO229 / WEEA	0.40±0.05	1.90 REF
T633-2	6	1.50±0.10	2.30±0.10	0.95 BSC	MO229 / WEEA	0.40±0.05	1.90 REF
T833-1	8	1.50±0.10	2.30±0.10	0.65 BSC	MO229 / WEEC	0.30±0.05	1.95 REF
T833-2	8	1.50±0.10	2.30±0.10	0.65 BSC	MO229 / WEEC	0.30±0.05	1.95 REF
T833-3	8	1.50±0.10	2.30±0.10	0.65 BSC	MO229 / WEEC	0.30±0.05	1.95 REF
T1033-1	10	1.50±0.10	2.30±0.10	0.50 BSC	MO229 / WEED-3	0.25±0.05	2.00 REF
T1033-2	10	1.50±0.10	2.30±0.10	0.50 BSC	MO229 / WEED-3	0.25±0.05	2.00 REF
T1433-1	14	1.70±0.10	2.30±0.10	0.40 BSC	- - - -	0.20±0.05	2.40 REF
T1433-2	14	1.70±0.10	2.30±0.10	0.40 BSC	- - - -	0.20±0.05	2.40 REF

NOTES:
1. ALL DIMENSIONS ARE IN mm. ANGLES IN DEGREES.
2. COPLANARITY SHALL NOT EXCEED 0.08 mm.
3. WARPAGE SHALL NOT EXCEED 0.10 mm.
4. PACKAGE LENGTH/PACKAGE WIDTH ARE CONSIDERED AS SPECIAL CHARACTERISTIC(S).
5. DRAWING CONFORMS TO JEDEC MO229, EXCEPT DIMENSIONS "D2" AND "E2", AND T1433–1 & T1433–2.
6. "N" IS THE TOTAL NUMBER OF LEADS.
7. NUMBER OF LEADS SHOWN ARE FOR REFERENCE ONLY.
8. MARKING IS FOR PACKAGE ORIENTATION REFERENCE ONLY.

DALLAS SEMICONDUCTOR MAXIM

TITLE: PACKAGE OUTLINE, 6,8,10 & 14L, TDFN, EXPOSED PAD, 3x3x0.80 mm

APPROVAL | DOCUMENT CONTROL NO. 21-0137 | REV. H | 2/2

-DRAWING NOT TO SCALE-

Revision History

Pages changed at Rev 2: 1–10, 12, 13

Maxim cannot assume responsibility for use of any circuitry other than circuitry entirely embodied in a Maxim product. No circuit patent licenses are implied. Maxim reserves the right to change the circuitry and specifications without notice at any time.

© 2007 Maxim Integrated Products MAXIM is a registered trademark of Maxim Integrated Products, Inc.

OCEAN CHIPS
Океан Электроники
Поставка электронных компонентов

Компания «Океан Электроники» предлагает заключение долгосрочных отношений при поставках импортных электронных компонентов на взаимовыгодных условиях!

Наши преимущества:

- Поставка оригинальных импортных электронных компонентов напрямую с производств Америки, Европы и Азии, а так же с крупнейших складов мира;
- Широкая линейка поставок активных и пассивных импортных электронных компонентов (более 30 млн. наименований);
- Поставка сложных, дефицитных, либо снятых с производства позиций;
- Оперативные сроки поставки под заказ (от 5 рабочих дней);
- Экспресс доставка в любую точку России;
- Помощь Конструкторского Отдела и консультации квалифицированных инженеров;
- Техническая поддержка проекта, помощь в подборе аналогов, поставка прототипов;
- Поставка электронных компонентов под контролем ВП;
- Система менеджмента качества сертифицирована по Международному стандарту ISO 9001;
- При необходимости вся продукция военного и аэрокосмического назначения проходит испытания и сертификацию в лаборатории (по согласованию с заказчиком);
- Поставка специализированных компонентов военного и аэрокосмического уровня качества (Xilinx, Altera, Analog Devices, Intersil, Interpoint, Microsemi, Actel, Aeroflex, Peregrine, VPT, Syfer, Eurofarad, Texas Instruments, MS Kennedy, Miteq, Cobham, E2V, MA-COM, Hittite, Mini-Circuits, General Dynamics и др.);

Компания «Океан Электроники» является официальным дистрибьютором и эксклюзивным представителем в России одного из крупнейших производителей разъемов военного и аэрокосмического назначения **«JONHON»**, а так же официальным дистрибьютором и эксклюзивным представителем в России производителя высокотехнологичных и надежных решений для передачи СВЧ сигналов **«FORSTAR»**.

AVIC JONHON

«JONHON» (основан в 1970 г.)

Разъемы специального, военного и аэрокосмического назначения:

(Применяются в военной, авиационной, аэрокосмической, морской, железнодорожной, горно- и нефтедобывающей отраслях промышленности)

«FORSTAR» (основан в 1998 г.)

ВЧ соединители, коаксиальные кабели, кабельные сборки и микроволновые компоненты:

(Применяются в телекоммуникациях гражданского и специального назначения, в средствах связи, РЛС, а так же военной, авиационной и аэрокосмической отраслях промышленности).

FORSTAR®

Телефон: 8 (812) 309-75-97 (многоканальный)
Факс: 8 (812) 320-03-32
Электронная почта: ocean@oceanchips.ru
Web: http://oceanchips.ru/
Адрес: 198099, г. Санкт-Петербург, ул. Калинина, д. 2, корп. 4, лит. А